General PIPE CLEANERS

OPERATOR'S MANUAL FOR

JM-2900

GAS JET

COLD WATER PRESSURE WASHER

CAUTION

RISK OF INJURY!

READ MANUAL *BEFORE* OPERATING!

This manual is an important part of the pressure washer and must <u>remain with this unit</u>!

©Copyright 2006

Form #37-1151-E/S-090126

TABLE OF CONTENTS

INTRODUCTION 3
IMPORTANT SAFETY INSTRUCTIONS 4
FEATURES 7
INSTALLATION & PREPARATION 8
OPERATION 11
MAINTENANCE 15
TROUBLESHOOTING 16

⚠ WARNING

⚠ WARNING: This product can expose you to chemicals including Lead, which is known to the State of California to cause cancer and birth defects or other reproductive harm. For more information go to www.P65Warnings.ca.gov

INTRODUCTION

Your JM-2900 Jet Set gas-powered water jet is designed to give you years of trouble-free, profitable service. However, no machine is better than its operator.

Read, understand and follow all safety warnings and instructions provided with the product. Failure to follow the warnings and instructions may result in electric shock and/or serious injury. Save all warnings and instructions for future reference.

! IMPORTANT !

These paragraphs are surrounded by a "SAFETY ALERT BOX". This box is used to designate and emphasize Safety Warnings that must be followed when operating this pressure washer.

Accompanying the Safety Warnings are "signal words" which designate the degree or level of hazard seriousness. The "signal words" used in this manual are as follows:

DANGER: INDICATES AN IMMINENTLY HAZARDOUS SITUATION WHICH, IF NOT AVOIDED, WILL RESULT IN DEATH OR SERIOUS INJURY.

WARNING: INDICATES A POTENTIALLY HAZARDOUS SITUATION WHICH, IF NOT AVOIDED, COULD RESULT IN DEATH OR SERIOUS INJURY.

CAUTION: INDICATES A POTENTIALLY HAZARDOUS SITUATION WHICH, IF NOT AVOIDED MAY RESULT IN MINOR OR MODERATE INJURY.

The symbols set below this paragraph are "Safety Alert Symbols". These symbols are used to call attention to items or procedures that could be dangerous to you or other persons using this equipment.

ALWAYS PROVIDE A COPY OF THIS MANUAL TO ANYONE USING THIS EQUIPMENT. READ ALL INSTRUCTIONS BEFORE OPERATING THIS PRESSURE WASHER AND ESPECIALLY POINT OUT THE "SAFETY WARNINGS" TO PREVENT THE POSSIBILITY OF PERSONAL INJURY TO THE OPERATOR.

Once the unit has been uncrated, immediately write in the serial number of your unit in the space provided below.

SERIAL NUMBER_____

Inspect for signs of obvious or concealed freight damage. If damage does exist, file a claim with the transportation company immediately. Be sure that all damaged parts are replaced and that the problems are corrected prior to operation of the unit. If you require service, contact your customer service representative.

Please have the following information available for all service calls:

1. Model Number
2. Serial Number
3. Date and Place of Purchase

IMPORTANT SAFETY INSTRUCTIONS

WARNING: READ AND UNDERSTAND OPERATOR'S MANUAL BEFORE USING THIS MACHINE. FAILURE TO FOLLOW OPERATING INSTRUCTIONS COULD RESULT IN DEATH OR SERIOUS INJURY.

WARNING! Read and understand all instructions. Failure to follow all instructions listed below may result in electric shock, fire and/or serious personal injury. Replacement manuals are available upon request at no charge, or may be downloaded from our website, www.drainbrain.com. Instructional videos are available for download on our website, and may be ordered. If you have any questions or problems, please call General's customer service department at 412-771-6300.

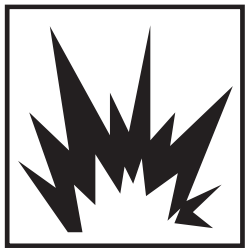

WARNING THESE INSTRUCTIONS ARE INTENDED TO FAMILIARIZE ALL PERSONNEL WITH THE SAFE OPERATION AND MAINTENANCE PROCEDURES FOR THE JM-2900.

RISK OF ASPHYXIATION

Serious injury or death may occur from inhaling engine exhaust or dangerous vapors. Use this product only in a well ventilated area. This water jet is designed for outdoor use only. Always make sure there is adequate ventilation (fresh outside air) for breathing and combustion.

RISK OF EXPLOSION

Do not operate power tools in explosive atmospheres, such as in the presence of flammable liquids, gases, or dust. Power tools create sparks which may ignite the dust of fumes. Do not spray flammable liquids. Risk of explosion. Flammable liquids can create fumes which can ignite causing property damage or severe injury.

RISK OF INJECTION

Do not direct discharge stream at people. This equipment can produce a high pressure stream of fluid that can pierce skin and its underlying tissues, leading to serious injury and possible amputation or death.

MISCELLANEOUS SAFETY PRECAUTIONS:

Always wear safety glasses and rubber soled, non-slip shoes. High pressure spray can cause paint chips or other particles to become airborne and fly at high speeds. Use of this safety equipment may prevent serious injury.

WARNING: THIS PRODUCT CAN EXPOSE YOU TO CHEMICALS INCLUDING LEAD, WHICH IS KNOWN TO THE STATE OF CALIFORNIA TO CAUSE CANCER AND BIRTH DEFECTS OR OTHER REPRODUCTIVE HARM. FOR MORE INFORMATION GO TO WWW.P65WARNINGS.CA.GOV.

WARNING: READ AND UNDERSTAND ALL INSTRUCTIONS. FAILURE TO FOLLOW ALL INSTRUCTIONS LISTED BELOW MAY RESULT IN ELECTRIC SHOCK, FIRE, AND/OR SERIOUS INJURY.

WORK AREA SAFETY

1. All installations must comply with local codes. Contact your electrician, plumber, utility company or the selling distributor for specific details. To comply with the National Electrical code (NFPA 70) and provide additional protection from risk of electric shock, the machines are equipped with a UL approved ground fault circuit interrupter (GFCI) power cord.
2. Risk of explosion. Do not spray flammable liquids or operate in an area where flammable or explosive materials are used or stored. Power tools create sparks which may ignite dust and fumes.

IMPORTANT SAFETY INSTRUCTIONS

3. Keep bystanders, children, and visitors away while operating machine. Distractions can cause you to lose control.

PERSONAL SAFETY

1. High pressure developed by jet machines will cause personal injury. Water spray should not be pointed at any person. High pressure spray can result in serious injury. If fluid seems to have penetrated the skin, seek emergency medical attention at once.
2. Grip jet hose or spray wand securely with both hands before starting the machine. Failure to do so could result in injury from a whipping hose or wand.
3. Always wear eye protection and rubber gloves. Safety equipment, eye safety devices, non-skid safety shoes and protective clothing must be worn when using this equipment.
4. Do not touch engine during operation. The muffler and other parts of the engine get hot and can cause severe burns.
5. Do not smoke while filling engine fuel tank. Fumes can ignite causing property damage and severe injury.
6. Stay alert, watch what you are doing and use common sense when operating a power tool. Do not use tool while tired or under the influence of drugs, alcohol, or medication. A moment of inattention while operating power tools may result in serious personal injury.
7. Dress properly. Do not wear loose clothing or jewelry. Contain long hair. Keep your hair, clothing, and gloves away from moving parts. Loose clothes, jewelry, or long hair can be caught in moving parts.

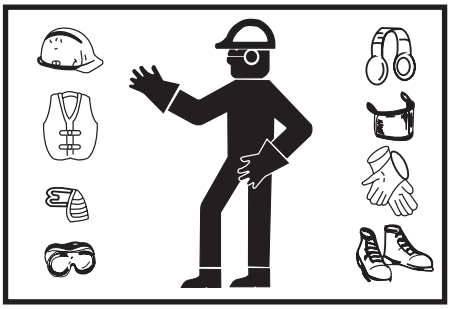

SERVICE

1. Tool service must only be performed by qualified service personnel. Service or maintenance performed by untrained personnel could result in injury and damage to the equipment.
2. When servicing tool, use only identical replacement parts. Follow instructions in maintenance section of this manual. Use of unauthorized parts or failure to follow maintenance instructions may cause injury or damage to equipment.

JET SAFETY

1. Do not operate jet above rate pressure or above 140 degrees (rated water temperature). Operating jet above rate specifications risks damage to the pump and related components, and will void the warranty.
2. Do not operate jet with the output valve in the off position for extensive periods of time. This will cause the water to overheat and damage the pump.
3. Never run pump without water in it. Operating the machine without water will cause the pump to fail and void the warranty.
4. Check for worn hose and components before each use. Check that all fittings are secured before using jet. Worn or lose fittings can cause damage to the machine and injure the operator.
5. Protect machine and pump from freezing. Storing or operating the jet in temperatures below freezing can damage pump, hose and other jet components. Store unit indoors or protect with anti-freeze when not in use.
6. General Wire Spring Co. will not be liable for any changes made to our standard machines or any components not purchased from General Wire Spring Co.

JET ASSEMBLY

- Upon arrival, inspect the shipping crate for damages. Uncrate an ex-

amine all parts. Note any damage to machine or component for claims against freight carrier.

- Jet must be stored and operated in horizontal position. Neve store in upright position or oil may leak from pump. If low, fill with SAE 30 weight non-detergent oil.
- Gas jets are shipped with oil in the engine. Consult motor manufacturer's guide for oil requirements.
- Jet machines are meant to be used at or near the working area and under operator supervision. If machine must be located out of sight of operator, special controls may be required for proper machine operation and operator safety.

! SAVE THESE INSTRUCTIONS !

FEATURES

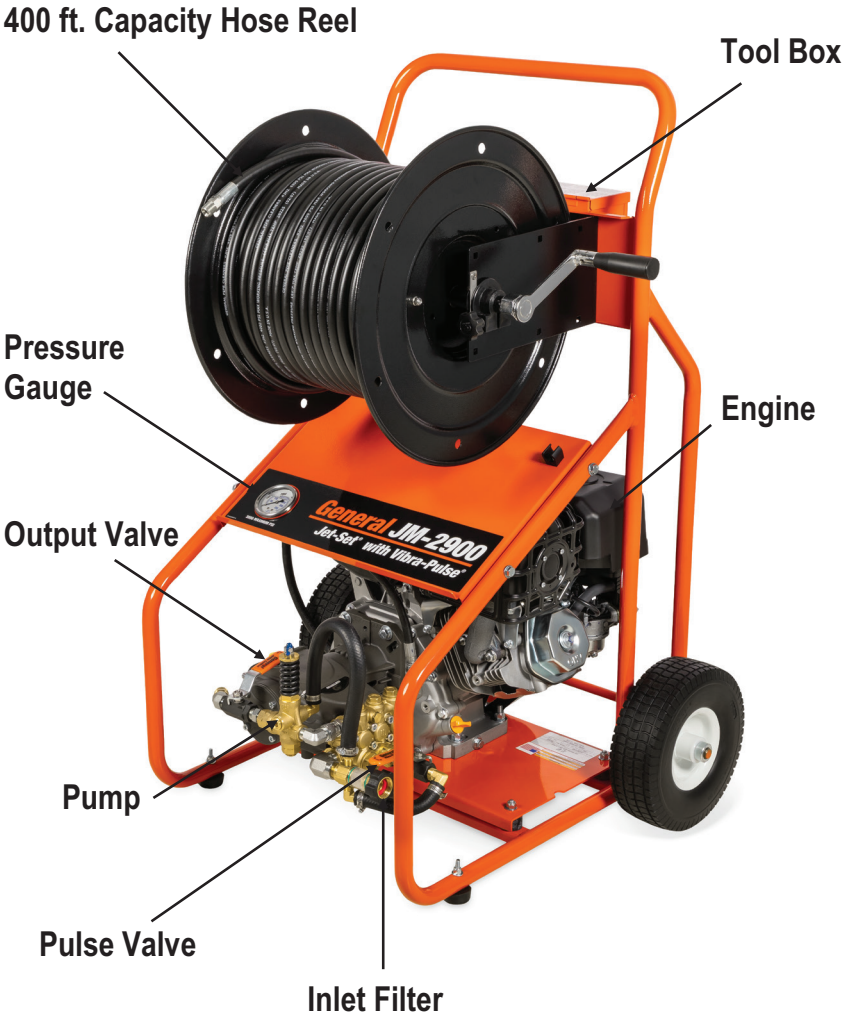
400 ft. Capacity Hose Reel
Tool Box
Pressure Gauge
Engine
Output Valve
General JM-2900
Jet-Set with Vibra-Pulse
Pump
Pulse Valve
Inlet Filter

INSTALLATION & PREPARATION

JET HOSE

1. When selecting hose size, consider that pressure is lost as the water travels down the length of the hose. As the length increases, the pressure decreases. In addition, the smaller the diameter of the hose, the greater the loss of pressure per foot will be. As an example, at 4 GPM, a 3/8" hose will lose 90 lbs. of pressure over a 100 ft. length. The gauge reflects pressure from the pump only, not pressure at the end of the hose. It is important to select the largest possible hose size in order to have as much pressure as possible at the end of the hose.
2. Hoses of the same diameter may be coupled together using the CC-1 coupling, but it is not recommended for use in lines smaller than 8" in diameter. The long length of the hose connectors and coupling together can get caught in bends in the line. It is not advisable to have two different hose sizes coupled in a drain line. There is a tremendous loss of pressure when combined, aside from the difficulty of getting around bends.

HOSE SELECTION GUIDE

HOSE SIZE (ID*)	PIPE SIZE	TYPICAL APPLICATIONS	AVAILABLE HOSE LENGTHS
1/8" (3.175mm)	1-1/2" — 2" (38mm — 51mm)	Small lines, bathroom sinks, tight bends	30 ft., 50 ft., 75 ft.
1/4" (6.350mm)	2" — 4" (51mm — 102mm)	Kitchen sinks, laundry drains, clean outs	100 ft., 150 ft., 200 ft.
3/8" (9.925mm)	4" — 8" (102mm — 230mm)	Floor drains, septic lines, long runs	100 ft., 200 ft

**Inside Diameter*

JET NOZZLES

1. A variety of jet nozzles are available for drain cleaning. Each has a different spray pattern and purpose. Some nozzles may have an orifice in the front to cut through the stoppage. All will have holes in the back to drive the hose down the line and clean the walls of the pipe. A tight spray pattern (15°) has more driving power for long runs, a wide spray pattern (40°) does a better job of cutting the grease off of the walls of the pipe. A combination of nozzles may be required to clear a line. Always turn off the machine and turn off output valve before changing nozzles.
2. Make sure the nozzle you are using matches the pump size. A 3000 psi pump requires a different nozzle orifice than a 1500 psi pump. Mismatching nozzles with pump size will either cause too little pressure, which may not clear the drain, or too much pressure, which may damage the machine.
3. Check nozzles before and after each use for clogged holes which can cause pressure to increase to dangerously high levels and damage the pump. A clogged hole can be cleared by simply using the NCT Nozzle Cleaning Tool.
4. Use the nozzle selection guide to determine what nozzle you will need for various applications. Examples: If a nozzle is stamped #52, it is a JN-52, drilled for 4 GPM @ 3000 PSI with several 15° rear jets and one forward cutting jet.

Powerful penetrating nozzle cuts through grease and ice.

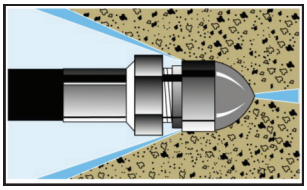

INSTALLATION & PREPARATION

Wide spray flushing nozzle cleans inside of pipe thoroughly.

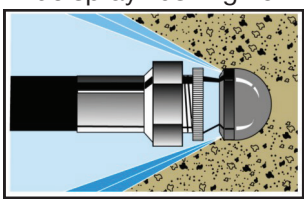

SPECIALTY NOZZLES: Spring leader nozzles and down head nozzles are special nozzles to help hose travel through the pipe when there are a lot of Tee's, curves, and bends.

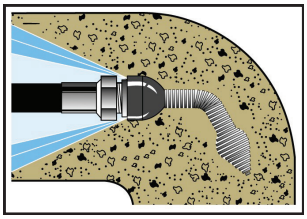

ROTARY NOZZLES: Rotary nozzles are useful as a finishing tool. After the line has been cleared, you may switch to the rotary nozzle to more thoroughly clean the walls of the pipe. Use these nozzles only in a predominantly straight run since they are longer than regular nozzles and may get caught in tight bends.

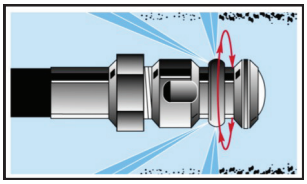

CHAIN SAW NOZZLES Chain saw nozzles spin at up to 10,000 rpm to rip through roots. Lengths of chain can be quickly and easily switched for different diameter pipes.

NOZZLE SELECTION GUIDE

HOSE SIZE	1/8"	1/4"	3/8"
	CAT#	CAT#	CAT#
15° Rear Jets w/No Forward Jet	JN-31	JN-41	JN-51
15° Rear Jets w/One Forward Jet	JN-32	JN-42	JN-52
30° Rear Jets w/No Forward Jet	JN-33	-	-
40° Rear Jets w/No Forward Jet	-	JN-44	JN-54
Spring Leader	JNSL-4	JNSL-5	JNSL-6
Rotary Nozzle* (Optional)	-	JNRB-4	JNRB-6
Chain Saw Nozzle (Optional)	-	-	JCSN-6

WARNING

THE FOLLOWING PAGES CONTAIN OPERATING AND MAINTENANCE INSTRUCTIONS.

DO NOT ATTEMPT TO OPERATE THIS PRESSURE WASHER UNTIL YOU HAVE READ AND UNDERSTOOD ALL SAFETY PRECAUTIONS AND INSTRUCTIONS LISTED IN THIS MANUAL.

INCORRECT OPERATION OF THIS UNIT CAN CAUSE SERIOUS INJURY!!

DO NOT ALTER OR MODIFY THIS EQUIPMENT IN ANY MANNER!

OPERATION

SET-UP

1. Locate the jet near the drain line on a level surface with drainage.

   Tip: Ideally, the drain line should be cleared from the downstream side, that is, from the street back toward the house. If you must clear the line from the drain toward the street, you may need to use a siphon pump to clear away excess water.
2. Check the oil level in the pump. If low, fill with SAE 30 weight nondetergent oil.
3. Check the oil level in the engine. If low, fill with the oil weight recommended in the motor manufacturer's manual.
4. Check the inlet filter to make sure it's clean before each use. To clean, unscrew filter cap, remove the screen and rinse thoroughly with water. Then, replace screen.
5. Check that incoming water supply is clean and free of debris. Turn the water source on for at least 15 seconds to remove any possible debris in the water before connecting hose to water inlet.
6. Connect one end of a water supply hose (not included) to the water supply and the other end to the water inlet of the jet machine. Water supply must be a minimum of 20 psi and not to exceed 100 psi. Caution: Water temperature must not exceed 140 degrees or damage to the pump can occur. Use only heavy duty 3/4" hose of no more than 50 ft. in length. If run without an adequate water supply, the pump will cavitate. Cavitation causes the pump to vibrate, causing damage to the pump. Note: Lack of water supply can lead to seal damage, causing a loss of pressure and will void the warranty to the pump.
7. Maximum temperature from the water source should not exceed 140°F (60°C). Using water hotter than 140°F (60°C) can cause damage to the pump and void the warranty. If jet is being used to clear ice blockages, see instructions on Ice Blockages.
8. Select the proper hose diameter for the line to be cleaned. When using new hose, run water through it to clean it out before attaching the nozzle.

OPERATION

WARNING: NEVER POINT THE END OF THE JET HOSE AT A PERSON WHILE OPERATING.

1. Select the correct jet hose size to match the line size you are clearing. (See Hose Section Guide) Check all hoses for wear and damage. Tighten all connections securely.
2. Select the correct nozzle and attach to the end of the hose. (See Nozzle Selection Guide) Note: If you are using a new jet hose, run water through it to flush out debris before connecting a nozzle.
3. Insert the jet hose 2 to 3 feet into the drain line before turning on machine.
4. Turn on the water supply valve fully to allow for maximum flow.
5. Turn on the jet output valve and allow water to run through the supply hose, jet, and jet hose to purge air from system before turning on the machine.
6. Make sure that the output valve is turned on and the water is flowing.
7. Start the engine using the Engine Start-up procedures listed below.
8. Guide the jet hose into the drain line. Do not feed the hose continuously, but rather, move the hose forward and back to allow the pressure to break up the stoppage and the water flow to flush it away. If you are clearing the line from the upstream side, this may take more time. Clearing the line from the downstream side allows debris to flow away easily.
10. It is often helpful to turn on the Vibra-pulse valve. The vibration generated helps to hose overcome the friction in the line and glide farther down the line. See Vibra-pulse section.

11. When the jet hose encounters a bend, it's advance will usually slow or stop. The hose has a slight bend in it from the hose reel. It may be necessary to manually feed or rotate the jet hose to work it around the bends. If the hose won't advance, put the hose in a loop and rotate it a quarter to half turn so the curve of the hose matches the pipe. It may also be necessary to pull the hose back six inches and snap it forward to hop across a gap in the pipe fitting.
12. Once you reach the stoppage, move the hose back and forth through the section several times to ensure the line is thoroughly cleared. You may also switch nozzles to a wide spray or rotary (optional) nozzle for wall to wall cleaning action.

GAS ENGINE START-UP

1. Make sure that the ball valve is turned on and water is flowing.
2. Move choke lever to the closed position. Note: Do not use choke if engine is warm or ambient air temperature is high.
3. Move throttle lever to the midpoint position.
4. Turn the engine switch to the ON position.
5. Pull the starter grip lightly until resistance is felt, then pull briskly.
6. As the engine warms up, gradually move the choke lever to the open position.
7. Position the throttle to the desired engine speed.

VIBRA-PULSE®

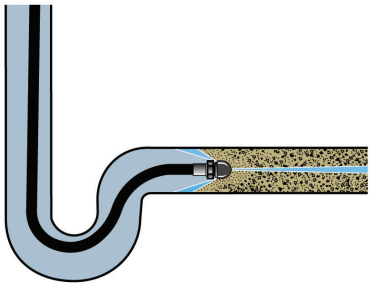

Pulsation makes the hose vibrate, helping the jet go longer distances and around tight bends easier. The pulse control valve is located on the front of the pump. Simply turn the valve on to engage the pulse. Vibra-pulse is most effective in a 1/8" hose. You'll notice less vibration with a 1/4" hose, and almost none with a 3/8" hose. However, the pulse is still effective, causing the water to burst from the nozzle hundreds of times per second. If you are still having difficulty getting hose around a tight bend, switch to a smaller diameter hose. Turn the pulse off before turning machine off.

SHUT DOWN INSTRUCTIONS

After drain cleaning or spray washing is completed, run clear water through the system. Always leave the output valve in the on position when turning off motor. Turn off water supply and drain as much water from the pump as possible. Remove water supply hose from inlet. If you are in a cold climate, see Freeze Protection section.

SPECIAL APPLICATIONS

ICE BLOCKAGES

High pressure water can be used to clear an ice blockage. A 3000 psi gas jet can clear a 4" line at an approximate rate of one foot per minute. The smaller, electric jet will take twice as long. Ambient air temperature will effect these times. Use a 15° nozzle with a forward jet. DO NOT allow the incoming water supply to exceed 140°F (60°C) or it could cause damage to the pump. Remember to follow the cold weather precautions found in the Freeze Protection section.

FREEZE PROTECTION

To protect your machine from severe damage caused by water freezing inside the components, it is important to winterize it whenever it is subjected to freezing temperatures.

The best way to protect the system is to keep it out of the cold. Barring that, the next best way is to flush the system with anti-freeze. To do so, simply

attach a short garden hose (not to exceed four feet) to inlet on the pump and put other end into the anti-freeze container. Be sure to remove the nozzle from the hose. Turn the machine on to draw anti-freeze into the system. When anti-freeze flows out of the end of the hose, turn the machine off. Connect high pressure hose and trigger, and follow above procedure. Cycle trigger on/off so that the anti-freeze will flow into unloader and injector section of machine.

When preparing to operate equipment for the next job, remove the anti-freeze. To do so, reconnect water source, turn pump on and direct flow of anti-freeze back into container. Be careful not to dilute anti-freeze with incoming water supply. Anti-freeze, if kept relatively undiluted, can be used again and again.

Hoses can also be protected from freezing by using compressed air to clear them of residual water. Remember to remove nozzle from jet hose and hold trigger of spray wand in open position.

ADJUSTING PRESSURE UNLOADER

The machine is equipped with a regulating pressure unloader to prevent pressure overload in the event that the nozzle is clogged or the output valve or spray wand trigger is off. When the machine is in the bypass mode, the pump will continue to run. However, running in bypass mode for extended periods will cause damage to the pump, no more than 5 minutes. Excessive temperatures will damage the pump and void the warranty.

The machine also comes with thermal overload protection. When water temperature in the pump increases to 140°F (60°C), the thermal relief valve will release hot water and allow cool water to enter pump from the fresh water supply.

To adjust the unloader, loosen the lock nut and turn the knob counter-clockwise to decrease pressure and clockwise to increase pressure. Caution: Do not over tighten unloader. Tighten lock nut after adjustments are made.

ACCESSORIES

HANDY-REEL WITH FOOT PEDAL - CAT # HM-200-W (OPTIONAL)

The Handy-Reel allows for remote application of the jet. The jet can be positioned at ground level, while the Handy-Reel can be carried up on a roof to clear vents and stacks. With the help of the Handy-Reel, gas jets can be used for indoor applications while the machine operates safely outside. The Foot Pedal interrupts the flow of water between the pump and the nozzle while leaving both hands free to guide the hose. Position the Handy-Reel at the drain site. Connect the jet machine to the inlet on the Foot Pedal. Select and attach nozzle to the hose on the reel. Put the hose 2 to 3 ft. into the drain line. Follow the start-up procedures.

FOOT PEDAL ONLY - CAT # FM-1 (OPTIONAL)

The Foot Pedal can be used with any jet manufactured by General. It interrupts the flow of water between the pump and the nozzle while leaving both hands free to guide the hose. The pump will continue to run in by-pass mode. Do not leave pump in by-pass for more than a few minutes or the pump can be damaged. (See Pressure Unloader)

The Foot Pedal may be connected either at the machine or remotely at the drain site. To use the foot pedal at the machine, remove the hose going to the swivel on the hose reel and attach it to the inlet side of the Foot Pedal. Then, connect the accessory hose (available in 6 ft., 25 ft., or 50 ft. lengths) between the outlet of the pedal and the swivel on the hose reel. Some jet models may need the added length of the accessory hose on the inlet side of the pedal.

OPERATION

For remote operation, pull the hose from the hose reel to the drain site. Attach the hose to the inlet of the pedal. The pedal is designed for 3/8” hose fittings. If using a 1/4” hose, use the AD-1 adapter, as well. Then, attach the smaller hose (1/8” or 1/4”) to the outlet side of the pedal. Use the smaller hose to clear the drain line.

SPRAY WAND - CAT # SWA-1500 (OPTIONAL)

CAUTION WHEN PRESSURE WASHING. WEAR GOGGLES AND RUBBER GLOVES AND BOOTS. ANALYZE ANGLE OF SPRAY AND ANTICIPATE ANGLE OF BACK SPLASH. DO NOT POINT SPRAY AT ANYONE, INCLUDING YOURSELF. DO NOT PUT YOUR HAND IN FRONT OF WATER SPRAY. IT CAN PENETRATE THE SKIN AND CAUSE A NEED FOR AMPUTATION. IT IS BEST TO START AT A 45° ANGLE AT A 7 TO 10 FT. (2 TO 3M) DISTANCE FROM OBJECT TO BE CLEANED. DIRECT SPRAY AT CLOSE RANGE CAN BE POWERFUL ENOUGH TO CAUSE DAMAGE.

The Spray Wand can be used to clean your truck or other applications. Caution: Never clean the machine with its own spray. Follow the same procedures listed previously for safety, set-up, operation, and maintenance. To operate the spray wand with your water jet, disconnect the twist connect at the output valve. Then, connect the spray wand hose, trigger and wand at the output valve. Turn on the water supply, then squeeze the trigger to purge air from the system. Continue to squeeze trigger as you turn on the machine.

Hold the high pressure spray nozzle approximately 6 – 8 ft. from the surface to be cleaned. When cleaning with a detergent, apply from bottom up with an even left to right movement. Rinse from top down with a similar motion. This will help reduce potential streaking. Always apply soap to a dry surface. This will enhance penetration and detergent cling and reduce dilution of detergent with an already wet surface.

You may draw soap through the spray wand in conjunction with the optional chemical injector. First set up the Chemical injector system (see Chemical Injector). Then, simply turn the nozzle barrel on the end of the wand counterclockwise. As the spray pattern widens, more of the detergent will be drawn through the wand. Turn the nozzle clockwise to reduce the detergent flow and narrow the water spray pattern to return to high pressure.

CHEMICAL INJECTOR – CAT # CMA-1 (OPTIONAL)

To use the chemical injector, disconnect the Twist Connect at the output valve on the jet. Then thread the Chemical Injector on to it. The Spray Wand then threads onto the free end of the Chemical Injector. Do not attach Chemical Injector to the inlet side of the pump. Detergents can damage pump.

To use the detergent injector, attach one end of the siphon hose to the barbed fitting on the injector and put the filter end into the detergent solution. Be sure the end of the hose is at the bottom of the container or bucket. Some models have adjustable valves to control the amount of detergent drawn through the hose.

MAINTENANCE

WARNING: DISCONNECT JETTER FROM POWER SOURCE BEFORE PERFORMING MAINTENANCE OR MAKING ANY ADJUSTMENTS.

Regular inspection is the key to preventing breakdowns and prolonging the life of the equipment. Follow this simple procedure religiously.

DAILY

- Check INLET FILTER for debris before each use.
- Check that the PUMP OIL LEVEL is within operating range on dipstick or sight glass.
- Check that the jet nozzles are not clogged or worn out.

WEEKLY

- Check the pressure hose for wear and damage. Damaged hose can be repaired at a local service dealer of by your equipment dealer.

PUMP CRANKCASE OIL CHANGE: Service after the 1st month, or after 20 hours. Then service every year or 500 hours. Use SAE 30W Non- Detergent Motor Oil to full mark on dipstick or to dot on sight glass.

ENGINE MAINTENANCE: Check engine manual for specific maintenance procedure

TROUBLESHOOTING

PROBLEM	PROBABLY CAUSE	SOLUTION
Low Pressure.	Wrong, clogged, or oversized nozzle.	Clean or replace worn nozzle. Check nozzle size.
	Clogged water inlet strainer.	Clean or replace strainers.
	Inadequate water supply.	Make certain water supply valve is on fully. Make certain water supply hose is at least 3/4” in diameter, in good condition, with no kinks or damage, and is not longer than 50 ft.
	Worn or damaged piston cups.	Replace piston cups.
	Worn or damaged inlet or discharge valve.	Replace worn valve poppets or valve springs.
	Dirt or foreign particles in valve assembly.	Remove any dirt particles.
	Air leak in inlet plumbing.	Locate air leak. Re-seal connection or replace damaged port.
Rough operation with loss of pressure.	Restricted inlet plumbing or air leak in inlet plumbing.	Repair clogged inlet fittings. Check supply hose and ensure adequate water supply.
	Damaged piston, cup or pump valve.	Replace any damaged pump parts and clean out any foreign particles.
	Clogged nozzle.	Clean or replace nozzle.
Water leakage at intake manifold or crankcase.	Worn manifold seals, piston or o-rings, or condensation inside crankcase.	Replace seals, sleeves or o-rings. Change oil at regular intervals.
	Inadequate water supply to pump, creating a vacuum lock.	Ensure adequate tap water supply. Clear inlet filter.
Oil leaks.	Worn pistons and/or leaking crank seals, crankcase cover seal, or drain plugs.	Replace seals, sleeves or o-rings.
Excessive wear.	Worn or loose bearings.	Replace bearings. Check bearing seals, spacers and retainers. Replace any worn parts.
Short pump life.	Scored cylinders from pumping acids.	Replace cylinders. Do no pump acid solutions. For acid applica-tion, ask your dealer for a pump saver injector.
	Abrasive particles in fluid being pumped.	Replace water and detergent strainers if damaged or missing. Install additional filter if fine abrasives are still evident.
	Operator(s) running pump without water supply.	Do not allow jet to be run without proper water supply.
	Hot water in pump.	Do not run in bypass for more than 5 minutes. Do not let water supply exceed 140°F (60°C).
Irregular spray pattern.	Worn or partially clogged nozzle.	Clean or replace nozzle.
Washer fails to draw detergent.	Detergent metering valve closed, or valve clogged or defective.	Open detergent metering valve, following procedure in operating instructions.
	Back pressure in hose (when using additional lengths of pressure hose).	Contact dealer for proper injector size when adding lengths of hose.
	Back pressure in pressure hose (when using dual lance wand).	Use proper size flood nozzle in dual lance wand (refer to parts breakdown).
	Suction tube not below liquid surface.	Completely submerge suction tube and strainer in detergent solution.
	Clogged or damaged suction strainer.	Clean or replace strainer.

TROUBLESHOOTING

PROBLEM	PROBABLY CAUSE	SOLUTION
Detergent solution too weak.	Clogged detergent strainer.	Clean or replace strainer.
	Air leak in detergent suction tube or inlet plumbing.	Find air leak and clean or replace parts as necessary.
Detergent solution too concentrated.	Original detergent too concentrated.	Dilute product as necessary to achieve proper concentration.
Detergent in rinse cycle.	Dual lance wand or adjustable nozzle holder in open position or chemical metering valve open.	Close dual lance wand adjustable lance holder to achieve high pressure. Close detergent metering valve.
	Worn or defective internal check valve.	Repair or replace check valve or injector parts as necessary.
Dilution of detergent concentrate during cycle.	Defective check valve in detergent tank.	Replace parts as necessary.
Unloader cycles.	Fitting leaking downstream.	Tighten/replace fitting.
	Piston or valve spring broken or worn.	Replace parts as necessary.
	Clogged nozzle.	Clean or replace nozzle.
Fluid leaking from body.	O-ring worn or cut.	Replace part as necessary.
Unloader will not come to pressure.	Foreign particle in valve.	Clean or replace valve.
	Nozzle worn or wrong size.	Replace part as necessary.
	Piston or valve worn.	Replace part as necessary.
Extreme pressure spikes.	Adjusting nut turned completely into unloader.	Back off adjusting nut.
	Clogged nozzle.	Clean or replace nozzle.

NOTES

DATE	SERIAL NUMBER	REASON FOR CHANGE
06/12/18	28005527	MAIN UNIT ASSEMBLY AND PUMP CHANGE
01/29/19	28006259	CHANGED HOSE REEL
08/15/22	28009478	PUMP CHANGE

UNIT ASSEMBLY JM-2900

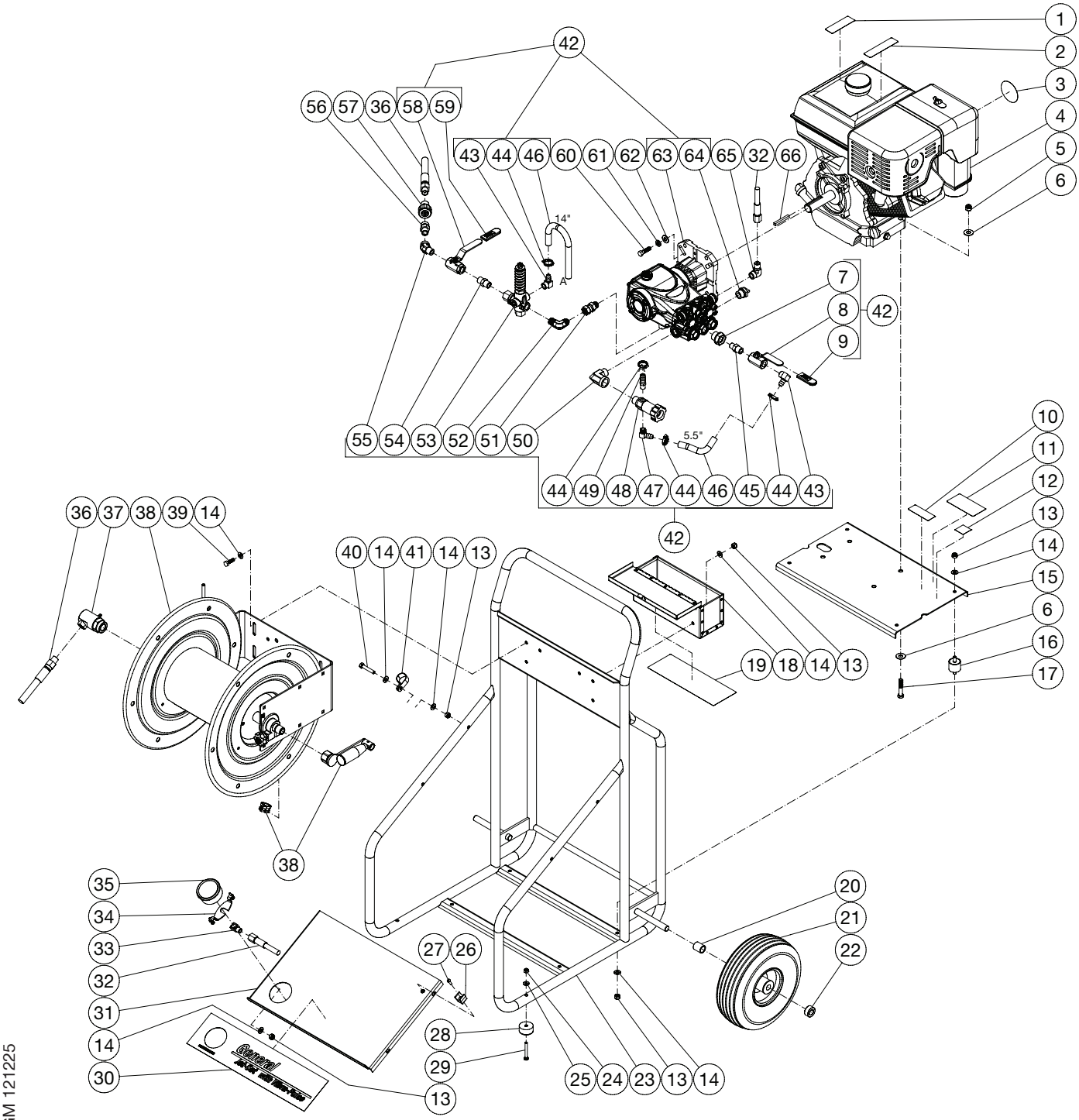

JM-2900-0GH_0GM 121225

JM-2900-0GH_0GM 121225								
UNIT ASSEMBLY								
ITEM	TITLE	PART #	QTY		ITEM	TITLE	PART #	QTY
1	DECAL - RISK OF FIRE (SEE JM71-0002)	N/A	1		34	U CLAMP	JM13-0211	1
2	DECAL - RISK OF BURNS (SEE JM71-0002)	N/A	1		35	PRESSURE GAUGE	JM22-0465	1
3	DECAL - REWIND GPC	N/A	1		36	HIGH PRESSURE HOSE	JM15-0312	1
4	ENGINE - HONDA	JM1-0086	1		37	SWIVEL	JM24-0390	1
-	ENGINE - MITM	JM1-0199	1		38	HOSE REEL	JM50-0226	1
5	LOCKNUT	JM30-0159	4		39	BOLT	JM27-0067	5
6	WASHER	JM28-0023	8		40	BOLT	JM27-0070	4
7	VALVE CAP	JM46-1427	1		41	CLIP	JM33-0291	1
8	BALL VALVE	JM22-0494	1		42	PUMP W/ EXTERNAL BYPASS	JM851-0427	1
9	HANDLE GRIP	JM7-0227	1		43	ELBOW	JM23-0050	2
10	DECAL - PROP 65	N/A	1		44	HOSE CLAMP	JM42-0011	4
11	DECAL - SILVER STICKER	N/A	1		45	NIPPLE	JM24-0146	1
12	DECAL - FLAG	JM34-4306	1		46	HOSE *(TWO FEET REQUIRED)	JM15-0007	1
13	LOCKNUT	JM30-0157	17		47	ELBOW	JM23-0119	1
14	WASHER	JM28-0003	26		48	FILTER	JM19-0207	1
15	ISOLATION PLATE	JM5-0308A64	1		49	HOSE BARB	JM23-0120	1
16	ISOLATOR	JM14-0177	4		50	ELBOW	JM24-0006	1
17	BOLT	JM27-0121	4		51	SWIVEL	JM24-0037	1
18	COMPONENT TOOL BOX	JM20-1213A64	1		52	ELBOW	JM24-0092	1
19	DECAL - WARNING/OPERATION (SEE JM71-0002)	N/A	1		53	UNLOADER	JM8-0634	1
20	SPACER	JM62-0188	2		54	NIPPLE	JM24-0010	1
21	WHEEL	JM14-0130	2		55	ELBOW	JM24-0042	1
22	COLLAR	JM33-0351	2		56	SCREW NIPPLE	JM23-0493	1
23	FRAME	JM5-0303A64	1		57	SCREW COUPLER	JM23-0490	1
24	LOCKNUT	JM30-0155	2		58	BALL VALVE	JM22-0461	1
25	WASHER	JM28-0002	2		59	HANDLE GRIP	JM7-0226	1
26	HOSE CLIP	JM62-0257	1		60	BOLT	JM27-0118	4
27	SCREW	JM27-2811	1		61	LOCKWASHER	JM29-0008	4
28	ISOLATOR	JM14-0069	2		62	WASHER	JM28-0022	4
29	BOLT	JM27-0020	2		63	PUMP	JM3-0467	1
30	DECAL - MARKETING	N/A	1		64	RELIEF VALVE	JM22-0005	1
31	GAUGE PANEL	JM20-1217A64	1		65	ELBOW	JM24-0004	1
32	HIGH PRESSURE HOSE	JM15-0309	1		66	KEY	JM43-0078	1
33	ELBOW	JM23-0014	1		-	DECAL SET	JM71-0002	1
*MUST ORDER IN ONE FOOT LENGTHS								

PUMP ASSEMBLY

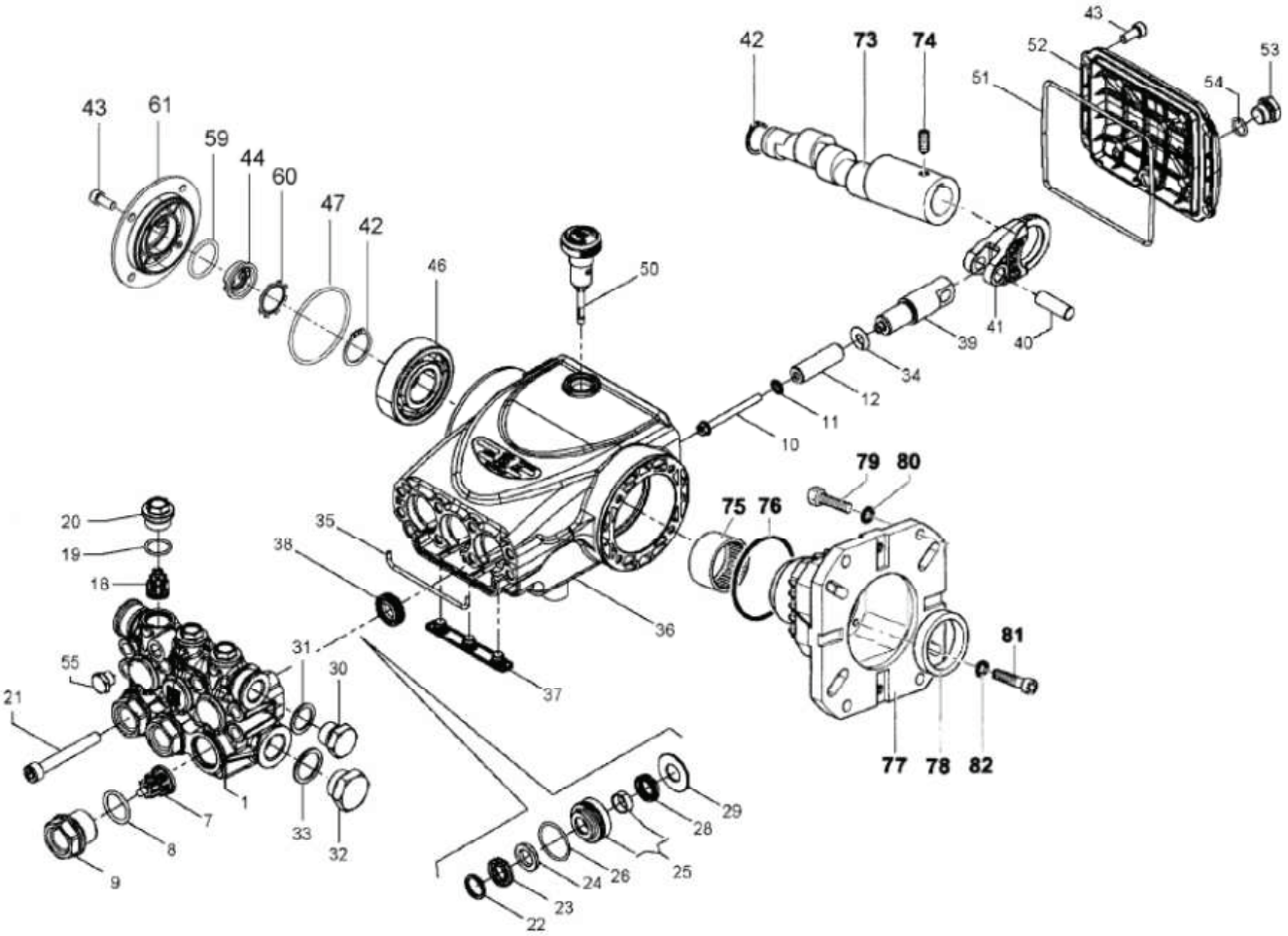

3-0467 060822

3-0467 060822								
PUMP ASSEMBLY								
ITEM	DESCRIPTION	PART #	QTY		ITEM	DESCRIPTION	PART #	QTY
1	MANIFOLD	N/A	1		39	PISTON GUIDE	JM46-1731	1
7	VALVE ASSEMBLY	JM70-0693	3		40	PISTON PIN	JM43-0079	3
8	O-RING (SEE KIT JM70-0694)	JM25-0745	3		41	CONNECTING ROD	JM46-1730	3
9	VALVE CAP (SEE KIT JM70-0694)	JM39-0071	3		42	STOP RING	JM46-0104	2
10	PLUNGER BOLT	JM27-0907	3		43	SCREW	JM27-8401	12
11	WASHER	JM28-0071	3		44	OIL LEVEL INDICATOR	JM46-1725	1
12	PLUNGER	JM46-1881	3		46	BEARING	JM48-0093	1
18	VALVE ASSEMBLY	JM70-0693	3		47	O-RING	JM25-0158	1
19	O-RING (SEE KIT JM70-0694)	JM25-0159	3		50	OIL DIPSTICK	JM46-1727	1
20	OUTLET VALVE CAP (SEE KIT JM70-0694)	JM46-1882	3		51	O-RING	JM25-0713	1
21	SCREW	JM27-8439	8		52	REAR COVER	JM46-1729	1
22	HEAD RING (SEE KIT JM70-0755 OR JM70-0758)	JM46-1883	3		53	PLUG	JM39-0017	1
23	PACKING (SEE KIT JM70-0755 OR JM70-0758)	JM46-1884	3		54	O-RING	JM25-0310	1
24	ANTI-EXT. RING (SEE KIT JM70-0755 OR JM70-0758)	SEE KIT	3		55	PLUG	JM39-0032	1
25	INTERMED. RING (SEE KIT JM70-0755)	JM46-1886	3		59	O-RING	JM25-0743	1
26	O-RING (SEE KIT JM70-0755 OR JM70-0758)	JM25-0744	3		60	STOP RING	JM46-1726	1
28	SEAL (SEE KIT JM70-0755 OR JM70-0758)	JM26-0445	3		61	SIDE COVER	JM46-1724	1
29	SUPPORT RING (SEE KIT JM70-0755)	JM28-1071	3		73	CRANKSHAFT	N/A	1
30	PLUG	JM39-0018	1		74	SET SCREW	JM27-1412	1
31	GASKET	JM28-0079	1		75	NEEDLE BEARING	JM48-0040	1
32	PLUG	JM39-0019	1		76	O-RING	JM25-0060	1
33	GASKET	JM46-1402	1		77	FLANGE	JM38-0038	1
34	WASHER	JM28-0070	3		78	OIL SEAL	JM26-0415	1
35	GASKET	JM26-0416	1		79	SCREW	JM46-0575	4
36	CRANKCASE	JM46-1733	1		80	WASHER	N/A	4
37	DRIP COVER	JM46-1734	1		81	SCREW	JM27-8404	4
38	OIL SEA (SEE KIT JM70-0695)	JM26-0446	3		82	WASHER	JM28-0072	4

REPLACEMENT KITS				
KIT#	DESCRIPTION	ITEMS	# OF ASSEMBLIES	# OF CYLINDERS
JM70-0693	VALVE	7, 18	6	3
JM70-0694	VALVE PLUG	8, 9, 19, 20	6	3
JM70-0695	OIL SEAL	38	3	3
JM70-0755	HOT PACK	22, 23, 24, 25, 26, 28, 29	1	1
JM70-0758	PACKINGS	22, 23, 24, 26, 28	3	3

HOSE REEL ASSEMBLY (JM50-0226)

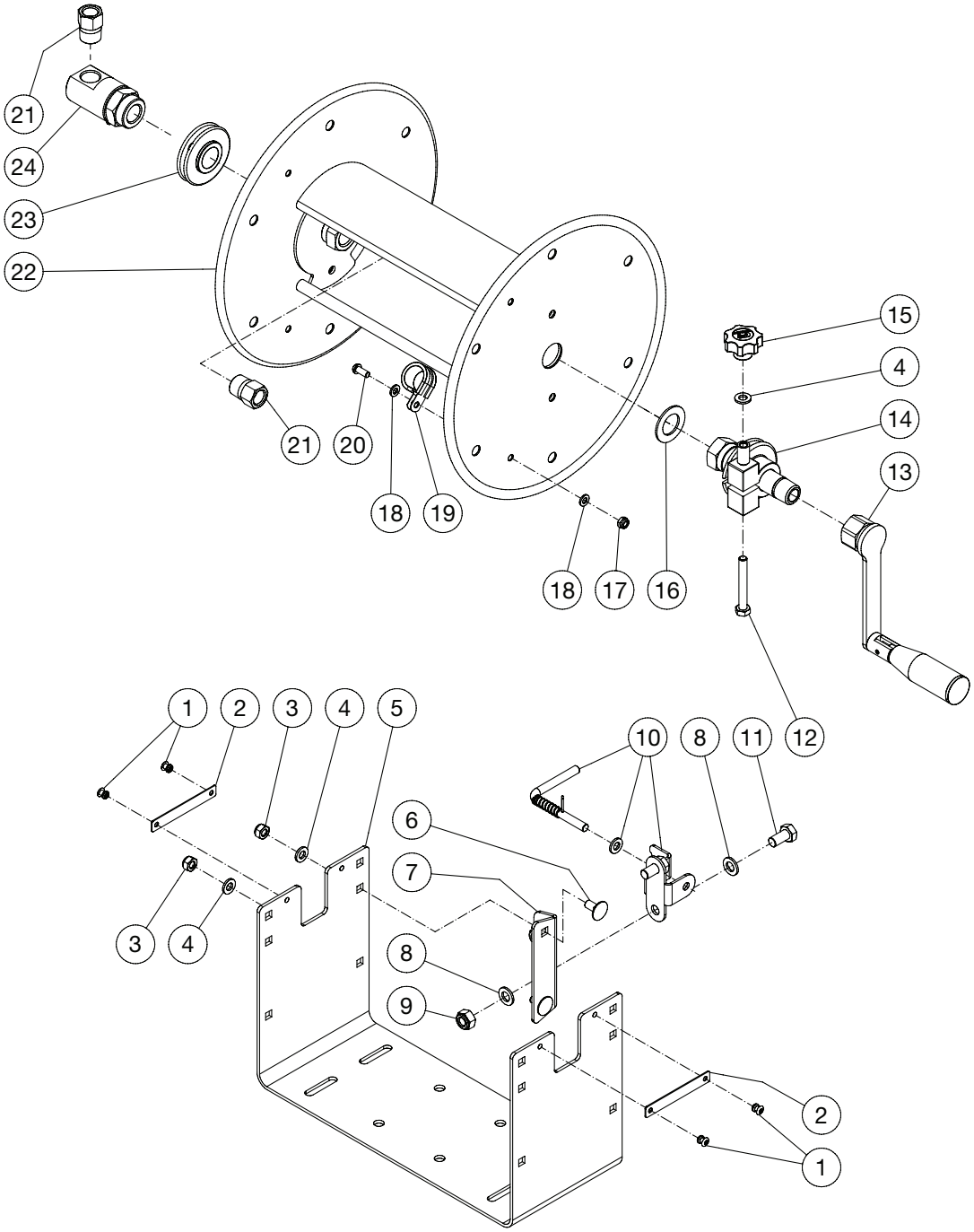

50-0225_0226 082026

			50-0225_0226 082026
HOSE REEL ASSEMBLY (JM50-0226)			
ITEM	DESCRIPTION	PART #	QTY
1	RIVET (SEE KIT JM70-0829)	N/A	4
2	CLAMP PLATE (SEE KIT JM70-0829)	N/A	2
3	LOCKNUT (SEE KIT JM70-0828)	JM30-5019	2
4	WASHER (SEE KIT JM70-0828 AND JM70-0829)	JM28-1039	3
5	BASE (JM50-0226)	N/A	1
6	CARRIAGE BOLT (SEE KIT JM70-0828)	N/A	2
7	BRACKET (SEE KIT JM70-0828)	N/A	1
8	WASHER (SEE KIT JM70-0828)	N/A	4
9	LOCKNUT (SEE KIT JM70-0828)	JM30-3159	2
10	LOCK PIN	JM43-0185	2
11	SCREW (SEE KIT JM70-0828)	JM27-5500	2
12	SCREW (SEE KIT JM70-0829)	JM27-8041	1
13	HANDLE ASSEMBLY	JM7-0298	1
14	BUSHING (SEE KIT JM70-0829)	N/A	1
15	KNOB (SEE KIT JM70-0829)	N/A	1
16	WASHER (SEE KIT JM70-0829)	N/A	2
17	LOCKNUT (SEE KIT JM70-0827)	JM30-3157	1
18	WASHER (SEE KIT JM70-0827)	JM28-0200	2
19	HOSE CLAMP (SEE KIT JM70-0827)	N/A	1
20	BOLT (SEE KIT JM70-0827)	JM27-6006	1
21	BUSHING	JM24-0282	2
22	HUB ASSEMBLY (JM50-0226)	N/A	1
23	BUSHING (SEE KIT JM70-0829)	N/A	1
24	SWIVEL	JM24-0396	1

REPLACEMENT KITS			
PART KIT #	DESCRIPTION	ITEMS	# OF ASSEMBLIES
JM70-0827	KIT-CLAMP	17-20	1
JM70-0828	KIT-LOCK PIN BRACKET	3, 4, 6, 7, 8, 9, 11	1
JM70-0829	KIT-BUSHING AND BRAKE	1, 2, 4, 12, 14, 15, 16, 23	1

General Wire Spring Co.
1101 Thompson Avenue
McKees Rocks, PA 15136
412-771-6300 www.drainbrain.com